Oxford Handbooks Online

What Can Political Science Learn from Business and Management?: An Interview with Stephen P. Borgatti

Steven Borgatti

The Oxford Handbook of Political Networks
Edited by Jennifer Nicoll Victor, Alexander H. Montgomery, and Mark Lubell

Print Publication Date: Sep 2017 Subject: Political Science, Political Theory
Online Publication Date: Jun 2017 DOI: 10.1093/oxfordhb/9780190228217.013.41

Abstract and Keywords

This chapter is one of six in this book in which leading scholars from other fields are interviewed about network science. These scholars bring to bear the perspective and experience of their fields, as well as insights about how network science integrates with questions that tend to be of interest to political scientists. They have knowledgeable and unique perspectives on the potential intellectual contributions that political scientists can make using network science approaches. This interview brings perspectives from the field of business and management to the study of political networks. Importantly, Stephen Borgatti has been a leader in the field in terms of developing applications and demonstrating productive application of network tools to questions of relevance. In this interview he brings these insights to political science.

Keywords: business and management, political science, network concepts, social network research, social capital

Which theoretical or methodological concepts do you see as the most relevant to politically oriented research?

Social network research in general has devoted itself to two generic research questions, both of which are applicable to the political setting. The first is the elucidation of network processes that account for the success (broadly speaking) of individuals or groups. This is fundamentally the story of social capital, which serves as a complement to human capital accounts of success that focus on qualities of the individual, such as experience, political skill, and so forth.

Social capital stories come in many flavors. Perhaps the most fundamental is the kind espoused by social resource theory (Lin, Ensel, and Vaughn, 1981), which focuses on the resources that an actor may benefit from by dint of having ties with the people who control them. Hence ties to savvy political operatives who know the system are useful, as

PRINTED FROM OXFORD HANDBOOKS ONLINE (www.oxfordhandbooks.com). (c) Oxford University Press, 2015. All Rights Reserved. Under the terms of the licence agreement, an individual user may print out a PDF of a single chapter of a title in Oxford Handbooks Online for personal use (for details see Privacy Policy).

Subscriber: OUP-Reference Gratis Access; date: 21 December 2017

are ties to wealthy donors, and as are ties to influentials who can command votes. An elaboration of this story is the notion, espoused by Granovetter (1973) and Burt (1992), that all else being equal, it is helpful to have ties to distinct sections of the network that are unconnected to each other. In Burt's account, the person who spans these different network fragments is the broker, and the lack of ties between fragments is termed a structural hole. Having structural holes maximizes diversity of information, allowing the political actor to have a broader view of the political landscape and make better-informed decisions. (p. 904)

However, information is not the only theorized benefit of structural holes. When first introduced, structural holes were said to provide control benefits as well, in the form of enabling brokers to play off unallied actors against each other (Burt, 1992). The general literature on structural holes has largely lost interest in this aspect of structural holes, but it is highly relevant to the political setting. Whenever two actors who are unable or unwilling to collude with each other compete for the resources controlled by a broker, the broker can exploit the situation by essentially auctioning himself off to the highest bidder. Almost any resource can be leveraged in this way, including simple attention: if you want to talk to me, you need to do me a favor, because there are others who want my time. This, of course, is the power of a larger employer who negotiates salaries individually with each employee. Once the employees start coordinating (i.e., unionizing), the employer can no longer divide and conquer, and indeed is effectively negotiating with a single collective node.

This kind of power, which hinges on having multiple alternatives, has a global aspect that may not be readily apparent. Suppose you have a network like the one shown in figure 38.1. The center node, A, has more alternatives than anyone else. However, the center is not the one with the bargaining power. The reason is that each of the three Bs that A has to play off each other has an exclusive alternative (a C) to bargain with instead of A. As a result, A finds himself in a difficult situation because the Bs would always prefer to bargain with their captive C than with the all-too-demanding A. This logic extends itself throughout the network, creating a system of interdependencies such that an actor's power can be partially dependent on nodes that are beyond the actor's horizon of observability.

The distinction between the information and control benefits of structural holes neatly maps onto two fundamental explanatory mechanisms in network theorizing about social capital. The information argument rests on an implicit model of social networks that sees social ties as providing—to use the terminology of Atkin (1974)—a backcloth along which traffic may flow. Thus, ties serve as pipes or roads that enable and constrain things to flow along certain paths. These flows include a variety of things such as information, material goods, and viruses. It is these flows that provide the proximal consequences for individual nodes, not the ties that enable them. Thus, hearing news early, before others do, can be an advantage. Receiving diverse perspectives on something, as opposed to recycled conventional wisdom, can be an advantage. Typically, (p. 905) however, researchers are not in a position to measure the timing, diversity, and quantity of specific

PRINTED FROM OXFORD HANDBOOKS ONLINE (www.oxfordhandbooks.com). (c) Oxford University Press, 2015. All Rights Reserved. Under the terms of the licence agreement, an individual user may print out a PDF of a single chapter of a title in Oxford Handbooks Online for personal use (for details see Privacy Policy).

Subscriber: OUP-Reference Gratis Access; date: 21 December 2017

bytes of information arriving at each node. It is in response to this problem that the machinery of social network analysis has been developed to take as input the pattern of ties in the network (which are more readily available than flows), calculate the myriad paths that something flowing through the network could take, and estimate flow outcomes such as how quickly and how broadly things are disseminated. For example, in the case of centrality measures, the interest is in calculating, for each node, such outcomes as time until first arrival (e.g., closeness centrality) and how often something passes through a node (e.g., betweenness centrality).

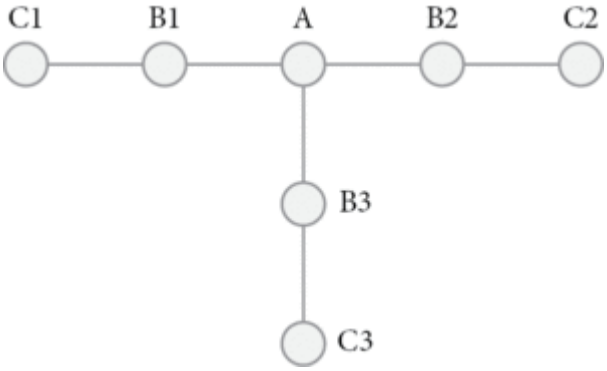

Click to view larger

Figure 38.1 Dependency network.

The control argument is different. Of course, nearly all network mechanisms involve some kind of dyadic flow, but not in the sense of the same thing moving from A to B and then from B to C. The system of dependencies by which the C nodes in figure 38.1 affect the power of the A node is not a flow, in the sense that C transfers its weakness to B, which then transfers its weakness to A, as we would see in an information flow. If anything, it is a cascade of causal reactions, so that C's situation creates a situation in B that is different from C's, and which in turn has an effect, different from B's, on A. Moreover, the effect of the structure (if unchanging) on relative power is a constant. It may take a few attempted transactions for it to affect behavior and outcomes, but the force exerted on A of having Cs on the side of Bs is as stable as the network is—it is always on.

Finally, the other canonical type of study in network analysis—the diffusion, contagion, and adoption of innovation type of study—is also highly relevant in politically oriented research. Here, the notion is that through interaction, nodes may acquire the same states as their neighbors. Over the years, a husband and wife come to like the same things, dislike the same things, and react similarly to similar stimuli. This kind of contagion is a special case of interpersonal influence, which has been well studied by social psychologists for decades. A key mechanism adopted by network theorists is Heider's (1946) balance theory, which says that if I like Corinne, and Corinne likes the Yankees, then I would experience cognitive dissonance if I didn't like the Yankees. As a result, I will either learn to like the Yankees more or learn to like Corinne less. Another mechanism is that of a relevant reference group. It may be that all of the laborers in my company have certain political views, but I find the views of my fellow middle managers especially relevant. Burt (1987) puts this more generally by arguing that it is the views of those with

PRINTED FROM OXFORD HANDBOOKS ONLINE (www.oxfordhandbooks.com). (c) Oxford University Press, 2015. All Rights Reserved. Under the terms of the licence agreement, an individual user may print out a PDF of a single chapter of a title in Oxford Handbooks Online for personal use (for details see Privacy Policy).

Subscriber: OUP-Reference Gratis Access; date: 21 December 2017

whom I am structurally equivalent that I take particular notice of. Structural equivalence here refers to having the same kinds of ties with the same third parties.

As political science continues to adopt network theory and methods, what do you see as the primary pitfalls or dangers the field faces?

Adoption always carries the risk of unwittingly pulling something out of context. It is obvious from the discussion above that network concepts such as betweenness centrality or measures of dependency power such as the graph-theoretic power index known as GPI (Markovsky, Willer, and Patton, 1988) are built on models and therefore carry (p. 906) theory. Freeman's betweenness provides an exact estimate of the number of times something flows through a node, but only if what is flowing conforms to three rules: (1) it can only be in one place at one time; (2) it travels only on the shortest paths; and (3) when there are multiple, equally short paths, it chooses uniformly at random between them. If the phenomena being studied don't follow these rules very well, betweenness yields very poor estimates. If what flows does so by moving along random walks, random walk betweenness (Newman, 2005) does a much better job. Borgatti (2005) showed that for things flowing under a gossip regime (defined as copying rather than transferring from node to node and not taking the shortest paths but rather graph-theoretic trails, which can revisit nodes but do not revisit lines), Freeman's betweenness gets it wrong. In a simulation based on Padgett and Ansell's (1993) data on ties among Florentine families during the Renaissance, betweenness correctly gives the Medici family top billing but completely misses the importance of the Medici's close rivals, the Strozzi family, who were historically the dominant family prior to the rise of Cosimo di Medici. The simulation puts them in second place, whereas betweenness puts them in the lower half of the pack.

The point is that political science cannot simply adopt, say, betweenness centrality, because it is highly cited or was successfully employed in an influential study. It is linked to a model of network processes, and those should match the processes found in the research context it is to be applied to. For people new to social network analysis, it is extremely easy to see it more as a set of methods, like significant tests, than a set of theoretical concepts with associated measures. This is particularly true for fields that normally express theory in narrative form rather than in formal, mathematical, terms. I don't know political science well enough to know if it fits this category, but for fields that do, anything expressed as a formula or an equation is likely to be seen as part of statistical methodology, like a regression equation. In such fields, it is difficult to understand that $e = mc^2$ is a theoretical statement, not a formula used by the local power company to measure output.

I think most of the math in network analysis is best regarded as formal theory. The parts of network analysis that are methodology are data collection methods, algorithmic choices, and hypothesis testing methods, such as QAP regression, exponential random graph models (ERGM), and the longitudinal stochastic actor-oriented models (SAOM) embodied in the Siena software package.

PRINTED FROM OXFORD HANDBOOKS ONLINE (www.oxfordhandbooks.com). (c) Oxford University Press, 2015. All Rights Reserved. Under the terms of the licence agreement, an individual user may print out a PDF of a single chapter of a title in Oxford Handbooks Online for personal use (for details see Privacy Policy).

Subscriber: OUP-Reference Gratis Access; date: 21 December 2017

The second trap is to adopt a single idea that comes to stand for the field as a whole. The adoption process always carries with it founder's effects, such as when an island is colonized by a given pair of mating birds, resulting in sharply reduced genetic diversity compared to the parent population. I think an object lesson is provided by the case of networks in the field of management research, which seems to have congealed around a single idea: the notion of structural holes. Looking at papers given at PolNet, I suggest that the incidence of ERGMs is considerably higher than in other fields. The danger, of course, is that once a concept or method becomes too dominant, it is no longer a choice; it must be used, or else you're not doing network (p. 907) analysis or at least not doing it right. And yet it may not be appropriate for a given research question.

What mistakes or stumbling blocks have you, or your field, faced in the study and application of network methods?

I would restate the question to include network concepts as well as methods. The mistake I notice in my field (management) is increasing myopia. Early work in management embraced the whole toolkit of network concepts. For example, early introductions to network concepts were broad and complete, as seen in classic papers by Tichy and Fombrun (1979) and Lincoln (1982). Older empirical studies adopted a variety of network concepts, including betweenness centrality (Brass, 1984) and regular equivalence (Krackhardt and Porter, 1986). Today, virtually every empirical and theoretical piece relies on just one concept: structural holes (Burt, 1992). It is almost as if the richness of network analysis was, for management, a problem to be solved. It created uncertainty about which concept to use, and in response, producers (researchers) turned to mimicking each other in search of a sense of legitimacy. It's funny, because I have often derided management's "new institutional" theory as merely an uptown version of network diffusion theory with bigger words, but I have to admit that their central tenet of mimetic isomorphism under conditions of uncertainty (DiMaggio and Powell, 1983) really nails the evolution of network research in the field of management.

As a student of Levi-Strauss, though, I have a semantic theory of what's happened to network research in management. I think what we are seeing is the power and appeal of synecdoche: a semantic device in which the part stands in for the whole, such as when we refer to workers as hands. Thus, in management today, the concept of structural holes is network analysis in its entirety. I've seen this in other fields as well, such as when Milroy and Milroy (1978), having adopted Granovetter's (1973) strength of weak ties theory, included "the network variable" in their empirical analysis—a single survey question asking respondents about their integration with their community.

What Contributions Do You Hope Political Science Will Make to the Study and Application of Networks in Your Discipline?

This is a dangerous thing to comment on. Most social science fields see themselves as fundamental and see other fields as mere branches of their own. So to list any specific

PRINTED FROM OXFORD HANDBOOKS ONLINE (www.oxfordhandbooks.com). (c) Oxford University Press, 2015. All Rights Reserved. Under the terms of the licence agreement, an individual user may print out a PDF of a single chapter of a title in Oxford Handbooks Online for personal use (for details see Privacy Policy).

Subscriber: OUP-Reference Gratis Access; date: 21 December 2017

contributions could easily seem to minimize and undervalue political science. But since you asked, I will suggest a few things that seem like a good fit.

The first contribution I would like to see has to do with the actions taken by political actors. Most of the research in sociology is about how certain network structures (or positions within them) have consequences for those involved. I believe that it is widely held that, in contexts like organizations, people are (variably) cognizant of their positions and seek to improve them. But research on what concrete moves people actually make to achieve and leverage these positions is scarce. How do certain senators become **(p. 908)** vastly more influential than others? How do they deploy their structural position to achieve a specific outcome? And from a whole-network perspective, what levers do stakeholders have available to them for changing the network toward a desired shape? For example, if a legislature is dysfunctionally divided into warring factions, how can this be changed? Managers of organizations have a few very effective tools, but they are also very crude: things like transferring people to different locations. I think that political arenas are particularly attractive contexts to study these questions because the actors seem—anecdotally at least—to be highly cognizant of the system of alliances and dependencies around them and consider carefully how to accumulate and on what to spend their political capital. I would especially value ethnographic research that embeds itself in a political setting and asks the actors what they are thinking as they make their moves.

The other area that I think political science is uniquely suited to contribute to is the phenomenology of social networks. A small but growing area within social network research is concerned with the perception of ties, both which ties are perceived and the consequences of perception. While it has long been known that having ties to high status people is useful, there is growing acknowledgment that being perceived to have ties to important people is equally and independently useful. A favorite quotation in the network literature is from a chapter by Cialdini (1989) on image management in which he says: “At the height of his wealth and success, the financier Baron de Rothschild was petitioned for a loan by an acquaintance. Reputedly, the great man replied, ‘I won’t give you a loan myself, but I will walk arm-in-arm with you across the floor of the Stock Exchange, and you soon shall have willing lenders to spare’.” However, it is not just about the benefit to self of others’ perceptions. It is also about one’s own perceptions. By illustration, Krackhardt (1992) sketches a case study of a failed unionization drive that might have succeeded had the union understood which of the potentially pro-union workers was central in the organization’s friendship network. Instead, the union allied itself with a firebrand who was a good ideological choice and was highly motivated but had no interpersonal influence with the rest of the workers. Political situations like these seem ideally suited for exploring the perceptions of ties and the consequences of those perceptions.

References

PRINTED FROM OXFORD HANDBOOKS ONLINE (www.oxfordhandbooks.com). (c) Oxford University Press, 2015. All Rights Reserved. Under the terms of the licence agreement, an individual user may print out a PDF of a single chapter of a title in Oxford Handbooks Online for personal use (for details see Privacy Policy).

Subscriber: OUP-Reference Gratis Access; date: 21 December 2017

Atkin, R. (1974). *Mathematical Structure in Human Affairs*. London: Heinemann.

Borgatti, S. P. (2005). Centrality and network flow. *Social Networks* 27: 55–71.

Brass, D. J. (1984). Being in the right place: A structural analysis of individual influence in an organization. *Administrative Science Quarterly* 29: 518–539.

Burt, Ronald S. (1987). "Social Contagion and Innovation: Cohesion versus Structural Equivalence." *American Journal of Sociology* 92: 1287–1335.

Burt, R. S. (1992). *Structural Holes: The Social Structure of Competition*. Cambridge, MA: Harvard University Press.

Cialdini, R. B. (1989). "Indirect Tactics of Image Management: Beyond Basking." *Impression Management in the Organization* 45: 45–56.

(p. 909) DiMaggio, P., & Powell, W. W. (1983). The iron cage revisited: Collective rationality and institutional isomorphism in organizational fields. *American Sociological Review* 48: 147–160.

Granovetter, M. S. (1973). "The Strength of Weak Ties." *American Journal of Sociology* 78: 1360–1380.

Heider, F. (1946). "Attitudes and Cognitive Organization." *Journal of Psychology* 21(1): 107–112.

Krackhardt, D. (1992). "The Strength of Strong Ties: The Importance of Philos in Organizations." In *Networks and Organizations: Structure, Form, and Action*, edited by N. Nohria and R. Eccles, pp. 216–239. Boston: Harvard Business School Press.

Krackhardt, D., and Porter, L. W. (1986). "The Snowball Effect: Turnover Embedded in Communication Networks." *Journal of Applied Psychology* 71(1): 50.

Lin, N., Ensel, W. M., and Vaughn, J. C. (1981). "Social Resources and Strength of Ties: Structural Factors in Occupational Status Attainment." *American Sociological Review* 46: 393–405.

Lincoln, J. R. (1982). "Intra-(and inter-) Organizational Networks." *Research in the Sociology of Organizations* 1(1): 1–38.

Markovsky, B., Willer, D., and Patton, T. (1988). "Power Relations in Exchange Networks." *American Sociological Review* 53: 220–236.

Milroy, J., and Milroy, L. (1978). "Belfast: Change and Variation in an Urban Vernacular." *Sociolinguistic Patterns in British English* 21: 19–36.

Newman, M. E. (2005). "A Measure of Betweenness Centrality Based on Random Walks." *Social Networks* 27(1): 39–54.

PRINTED FROM OXFORD HANDBOOKS ONLINE (www.oxfordhandbooks.com). (c) Oxford University Press, 2015. All Rights Reserved. Under the terms of the licence agreement, an individual user may print out a PDF of a single chapter of a title in Oxford Handbooks Online for personal use (for details see Privacy Policy).

Subscriber: OUP-Reference Gratis Access; date: 21 December 2017

Padgett, J. F., and Ansell, C. K. (1993). “Robust Action and the Rise of the Medici, 1400–1434.” *American Journal of Sociology* 98: 1259–1319.

Tichy, N., & Fombrun, C. (1979). Network analysis in organizational settings. *Human Relations* 32: 923–965. (p. 910)

Steven Borgatti

Steven Borgatti holds a Ph.D. in Mathematical Social Science from the University of California, Irvine (1989) and is Professor and Paul Chellgren Endowed Chair at the University of Kentucky in the Management Department of the Gatton College of Business and Economics. He is coauthor of Analyzing Social Networks with Martin Everett and Jeff Johnson (Sage Publications 2013) and his research on social networks, knowledge management, and computational models has been published in Science, Social Networks, Organization Science, Academy of Management Review, and elsewhere.



PRINTED FROM OXFORD HANDBOOKS ONLINE (www.oxfordhandbooks.com). (c) Oxford University Press, 2015. All Rights Reserved. Under the terms of the licence agreement, an individual user may print out a PDF of a single chapter of a title in Oxford Handbooks Online for personal use (for details see Privacy Policy).

Subscriber: OUP-Reference Gratis Access; date: 21 December 2017